A Fully-Coupled Hybrid IEEE 802.15.4a Ultra-Wideband/Inertial Sensor Platform for Wearable Applications

Michael Walsh, Salvatore Tedesco, Tingcong Ye, Brendan O'Flynn,
Tyndall National Institute,
University College Cork, Cork, Ireland
michael.walsh@tyndall.ie

I. Motivation & Goals

Ultra-Wideband (UWB) transceivers and low-cost micro electro mechanical systems (MEMS) based inertial sensors are proving a promising hybrid combination for location specific wearable applications. The integration of UWB and Inertial Measurement Units (IMUs) has two primary benefits. Firstly, IMU data can be employed to compute the travelled trajectory when UWB measurements are absent due to range limitations or adverse non-line-of-sight (NLOS) conditions, and secondly, UWB-based positioning can supplement IMU data to discriminate between accurate measurements and data corrupted by noise and drift. To date however proposed solutions have implemented the two technologies in isolation where the IMU navigation and UWB ranging execute separately and their respective data are fused a posteriori using particle or Kalman filter algorithms [1-2]. This approach limits the achievable synchronization between the inertial sensor data and UWB ranging measurements, reducing the achievable accuracy of the system. These methodologies are also limited in that the nodes are incapable of exchanging inertial or positional data with other network nodes given the UWB channel is dedicated to ranging alone. The solution in many cases is to supplement the system with an additional wireless technology for communications, which, in turn, increases the cost and size of the infrastructure and further complicates data synchronization. A solution is to fully couple the adopted technologies, which implies that the UWB communication channel is used both for ranging and as mechanism for transmitting inertial, positional and other useful information e.g. physiological. This reciprocal data distribution allows several nodes to track one another and for each node to consider its mobile neighbours as anchors at intelligently arrived at spatiotemporal points. This approach therefore has the potential to reduce the overall number of anchors needed for localization. This paper presents a fully-coupled architecture whereby standardised IEEE 802.15.4a UWB is employed for both ranging and as a mechanism for exchanging data between the nodes of a network. A proof-of-concept system is implemented for an ambulatory use case scenario. Fusion algorithms are employed and the preliminary results show the benefits of a fully-coupled approach when compared with traditional standalone inertial navigation systems (INS).

II. Methods

A. Ranging and Orientation Methodology

A number of challenges still remain when deploying UWB ranging particularly in mobile situations including non-synchronized wireless network, multi-user interference, multipath effects, and NLOS propagation. In order to minimize the effects of these hardware and environmental issues, a Symmetric Double-Sided Two-Way Ranging (SDSTWR) algorithm has been recently proposed and developed for personal area networks [3]. It relies on the estimation of the Time-of-Flight (*TOF*) of an UWB signal pulse traveling back and forth between two UWB modules (known as the leader and the follower). The orientation of an inertial module can be symbolized using quaternion algebra. While gyroscopes are reliable only in the short-term they cannot provide an absolute orientation reference. On the other hand, accelerometers are sensitive to high dynamic motions; and magnetometer outputs can be corrupted by ferromagnetic materials in the proximity of the sensor; thus, are more effective in the long-term. For these reasons, a complementary filter represents a useful solution so as to fuse the outputs from sensors with complementary spectral characteristics. In particular, the quaternion obtained from accelerometer and magnetometer passes through a low-pass filter, whilst the gyro-based quaternion through a high-pass filter. Resulting signals are finally combined to provide an accurate and robust orientation. It is for this reason that the approach adopted in this work employs accelerometer, gyroscope and magnetometer data and complete details can be found in [4].

B. Proposed Hybrid UWB/IMU Architecture

The hybrid system proposed in this work consists of two modules, an IMU and an IEEE 802.15.4a UWB transceiver. For many applications it is a requirement that a subject's movements can be tracked both locally and remotely. "Locally" implies that the same node is able to self-locate using the measurements of the on-board IMU and UWB modules. Remote tracking indicates that the tracking is carried out by a second node (such as, a peer node or a beacon) to which the first node is transmitting all the measured data. Fig. 1 illustrates a two node scenario where the Node 1 IMU module estimates its 3D orientation and stores it chronologically in a Local Inertial database, which is periodically updated. Simultaneously, when the on-board UWB

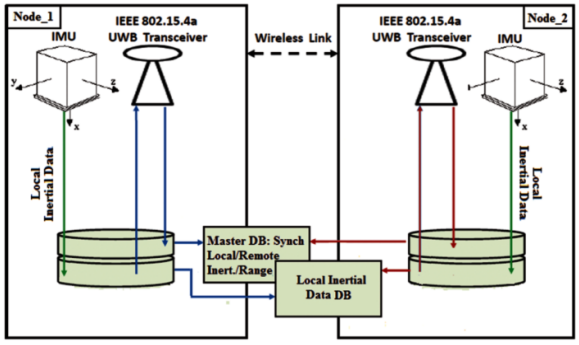

Fig. 1. Fully-coupled 802.15.4a UWB\IMU architecture including ranging, wireless communications and local and remote data synchronization

transceiver is transmitting a wireless signal to perform ranging, the latest inertial data accumulated in this database is integrated into the transmitted UWB packet. Subsequently, the UWB transceiver in Node 2 receives the packet and, in accordance with the SDSTWR algorithm, re-transmits a signal to Node 1, contained in which is the latest inertial data, stored in Node 2's Local Inertial database, along with the distance estimated from the received ranging information. Upon receiving this transmission, Node 1 is subsequently able to complete the SDSTWR algorithm distance calculation "locally" and to associate to this value the latest locally generated inertial sample. In addition it receives the distance estimated "remotely" by Node 2, together with the associated inertial sample.

I. Implementation & Experimental Results

The experiment entails the use of two nodes (for the purposes of the experiment known as the mobile and beacon nodes respectively), each comprising of an IMU and a UWB module. More specifically, the IMU module is based on the modular Tyndall 25mm mote platform [5], which consists of an array of 3D accelerometer, 3D gyroscope, and 3D magnetometer coupled with a high resolution analog-to-digital converter (ADC). The UWB prototype, developed by Decawave, is the world's first IEEE 802.15.4a standard compliant UWB transceiver. 3D orientation is estimated by the IMU in real-time 10 times per second employing the well-established low computational methodology in [4]. The 802.15.4a UWB module, depending on range, calculates the distance between the two transceivers approximately every 0.6 seconds. In the experimental scenario Fig. 2 one of the nodes represents a non-mobile beacon with known position, considered (0; 0), whilst the second node moves counter-clockwise on a 2D plane according to a path representing a Greek cross with equal arm width and length. The length of each segment of the cross is 2 m and the route topology has been chosen in order to have a set of several orientation changes (12 in total) in correspondence with varying range. The start point of the mobile path coincides with the end point and is located at (2; 0). In Fig. 2, the 2D positioning performance for two approaches INS and Hybrid (INS+UWB) are presented. According to the INS technique, the position of the mobile node compared to the beacon can be calculated using the following equations:

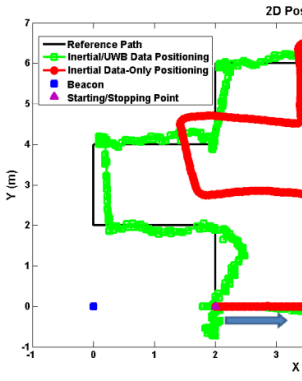

Fig. 2: 2D Positioning with INS approach (red curve) and INS+UWB correction mechanism approach(green curve).

$$\begin{cases} X_{N+1} = X_N \pm v_{x,N+1} \bullet dt \\ Y_{N+1} = Y_N \pm v_{y,N+1} \bullet dt \end{cases} \text{,with} \begin{cases} v_{x,N+1} = \bar{v} \bullet \cos(\Phi_{N+1}) \\ v_{y,N+1} = \bar{v} \bullet \sin(\Phi_{N+1}) \end{cases} \quad (1)$$

where (X_{N+1}, Y_{N+1}) indicates the next position of the mobile node, (X_N, Y_N) is the current position, dt is the sampling time, $\bar{v}$ is the magnitude of its speed and is assumed constant at 0.5 m/s, and Φ_{N+1} is the difference between the orientations estimated by the two nodes. Results for the standalone INS approach (red line) highlight the methodology is prone to drift due to the noise characteristics of the inertial sensors. Results for the hybrid approach (green line) show that the correction for sensor drift provided by fully coupled UWB enhances the overall tracking performance of the system substantially. For the INS case we can see that the error is initially small however it continually increases throughout the experiment reaching 2.6 metres and looks toward becoming unbounded. The UWB-based correction on the other hand maintains the error almost uniformly (<55cm) during each of the 12 turns of the experimental procedure. While the resulting error is not insubstantial it does however indicate the potential for the proposed architecture in the ambulatory context.

References

[1] S. Sczyslo, et al. "Hybrid Localization Using UWB and Inertial Sensors," IEEE Int. Conf. Ultra-Wideband (ICUWB), pp. 89-92, Hannover, Germany, Sept. 2008.

[2] L. Zwirello, et al., "Sensor Data Fusion in UWB-Supported Inertial Navigation Systems for Indoor Navigation," IEEE Int. Conf. Robotics and Automation (ICRA), pp. 3154-3159, Karlsruhe, Germany, May 2013.

[3] IEEE Working Group 802.15.4a Wireless Medium Access Control (MAC) and Physical Layer (PHY) Specifications for Low-Rate Wireless Personal Area Networks (WPANs). Alternate PHYs. NJ: IEEE, 2007.

[4] T. Ya, W. Hongxing, and T. Jingdong, "An Adaptive-Gain Complementary Filter for Real-Time Human Motion Tracking with MARG Sensors in Free-Living Environments," IEEE Trans. Neural Syst. Rehabil. Eng., vol. 21, no. 2, pp. 254-264, March 2013.

[5] M. Gaffney, et al. "A Smart Wireless Inertial Measurement Unit System: Simplifying & Encouraging Usage of WIMU Technology," Int. Conf. Pervasive Computing Technol. For Healthcare (PervasiveHealth), pp. 198-199, Dublin, Ireland, May 2011.

[6] M. Young, The Technical Writer's Handbook. Mill Valley, CA: University Science, 1989.